DELTA VALVES

VALVITALIA GROUP

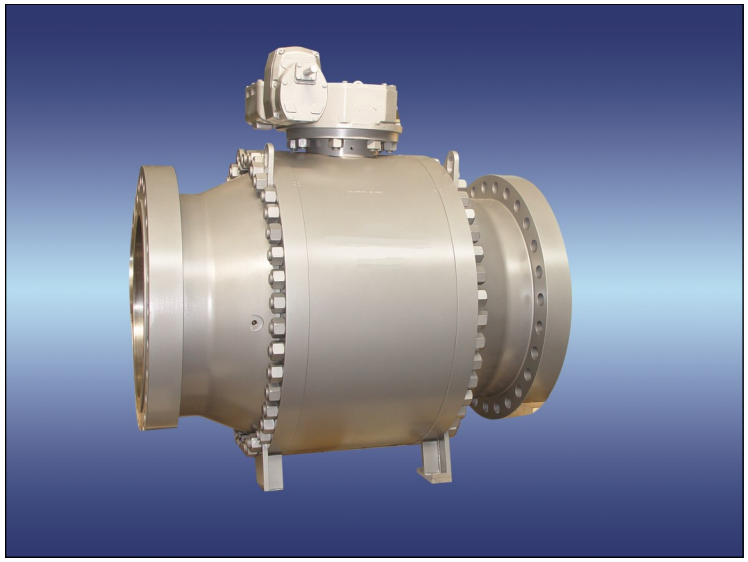

API-6D MONOGRAMMED TRUNNION MOUNTED BALL VALVES

QuarterTurn RESOURCES INC.

DELTA Valves, part of the VALVITALIA Group

VALVITALIA is a World Wide manufacturer of valves and related products to the oil, gas and power industries. As an innovative supplier, VALVITALIA offers an array of high quality, competitively priced products and services.

QUARTER TURN RESOURCES (QTR) is the exclusive North American Master Distributor for VALVITALIA. We are a major supplier to most companies in the oil and gas industry. With our 40 plus years of experience, we offer our customers many advantages over our competitors which include:

Three facilities: Two in Ponca City, OK and one in Deer Park, TX

Large inventory provides for exceptional delivery time

Full fabrication and coating facilities for standard, below grade and custom applications

In house automation and controls

TECHNICAL FEATURES

Standard Features	Series 54	Series 55	Series 58
Size Range	2" thru 4"	6" thru 36" (other sizes available)	20" thru 42" (other sizes available)
Pressure Class	ANSI 150 thru 2500	ANSI 150 thru 2500	ANSI 600 (other pressure classes available)
Three Piece Bolted Body	Standard	Standard	—
All Welded Design	—	—	Standard
Antistatic device	Standard	Standard	Standard
Self-relieving seats	Standard	Option	Option
Lubricated stem	Standard	Standard	Standard
Lubricated seats	Option	Standard	Standard
Double block and bleed	Standard	Standard	Standard
Metal to metal seats	Option	Option	Option
Trunnion mounted ball	Standard	Standard	Standard
Full or reduced bore	Full (reduced bore option)	Full (reduced bore option)	Full (reduced bore option)
Bidirectional	Standard	Standard	Standard
Forged Construction (A-350 LF2)	Standard	Standard	Standard
RF, BW or RTJ flanges to ASME B16.5	Standard	Standard	BW-Standard (other end connections available)
ANSI and API-6D end to end	Standard	Standard	Compact Weld End
API-6D manufactured, tested and monogrammed	Standard	Standard	Standard
Fire safe design to API-607 & API - 6FA (BS 6755 Pt.2)	Standard	Standard	Standard
Standard Operating Temperature	-20 degrees F to 350 degrees F Option to –50F	-20 degrees F to 350 degrees F Option to –50 degrees F	-20 degrees F to 350 degrees F Option to –50 degrees F

TYPE 54

TYPE 55

TYPE 58

Trunnion-mounted ball valve

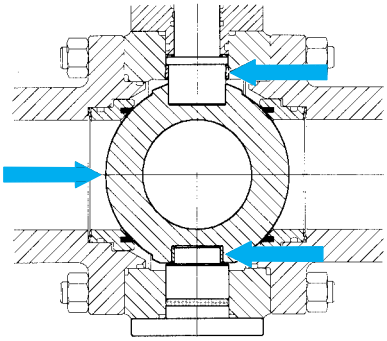

TYPE 54

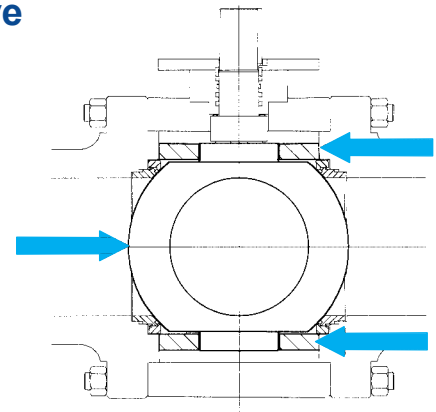

TYPE 55

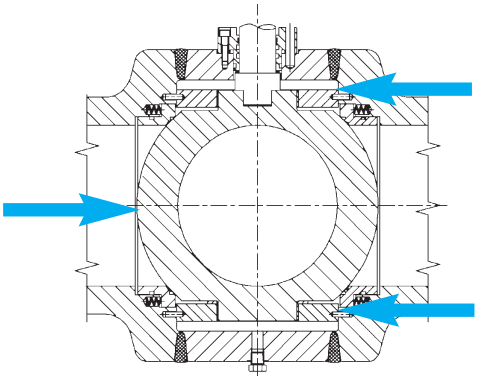

TYPE 58

When the ball is in fully closed position, two trunnions absorb the side thrust generated by line pressures, preventing excess friction between ball and seats. With this system, even at full-rated working pressure, operating torque stays low. Generous sizing of the trunnions, which is standard on the Delta Trunnion Mounted Ball Valve, are essential to the life and operation of the valve.

The spherical surface of the ball is machined and ground to close tolerance. To reduce torque and minimize wear, the ball is then Electroless Nickel Plated and polished to mirror finish.

EMERGENCY STEM AND SEAT SEALANT INJECTION

In case of emergency, when seat or stem seals are damaged by fire or other accidental causes, emergency sealant injection points are provided. Stem seal injection is standard on all sizes. For Type 55 ball valves, seat sealant injection is standard. For Type 54 ball valves, seat sealant injection is optional.

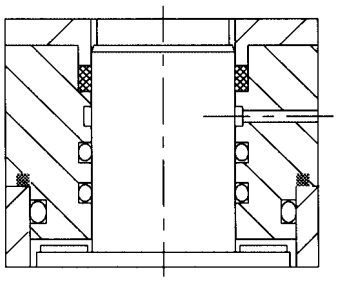

VALVE STEM

The stem is independent of the ball and is designed to be blowout proof.
Self-lubricated, low friction materials used for stem and trunnion bearings ensure predictable operating torques for the lifetime of the valve.

STEM SEAL

Triple barrier stem sealing system features two static O-rings and a third graphite seal, which is retained by the adapter flange. Upper seal can be replaced with the valve in line and in the closed position. (Type 55 & 58 only)

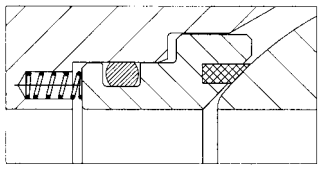

SEAT DESIGN

Type 54 ball valve: Reinforced PTFE, spring energized
Type 55 and Type 58: Primary metal-to-metal and secondary Viton seal, spring energized

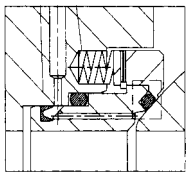

BODY DESIGN

Compact, streamlined, forged steel body for maximum strength and minimum weight.
A350 LF2 material ensures uniform, fine grain structure with proven toughness.

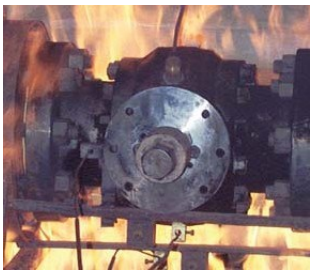

FIRE-SAFE DESIGN AND TEST

Fire safe design is standard on all DELTA ball valves. All shell components are sealed using both O-rings and fire gaskets.

Two O-rings and gland gasket prevent leak paths from the stem area.

If fire deteriorates the O-ring seal, fluid or gas leakage is prevented by the gland gasket, body gasket and the fire-safe stem packing.

The DELTA ball valve has been witness tested and certified to API 607, API 6FA and BS 6755 Pt.2

Body vent and drain

The drain and vent opening on the valve body allows for the cavity of the valve to be vented, and trapped liquids to be drained.

Double block and bleed

As a standard feature, DELTA Trunnion Mounted Ball Valves have two seating surfaces between which the cavity can be vented through a bleed connection to confirm the seat integrity of the valve.

Double piston effect (DPE) (Series 55 & 58-standard, 54-option)

With the DPE seat configuration, if a leakage occurs in the upstream seat, the pressure entering into the body cavity pushes the downstream seat against the ball creating an additional sealing surface.

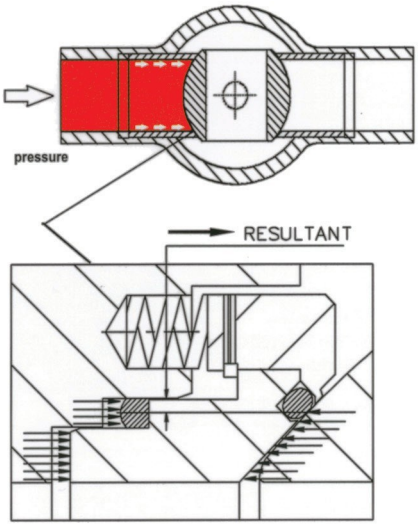

First barrier

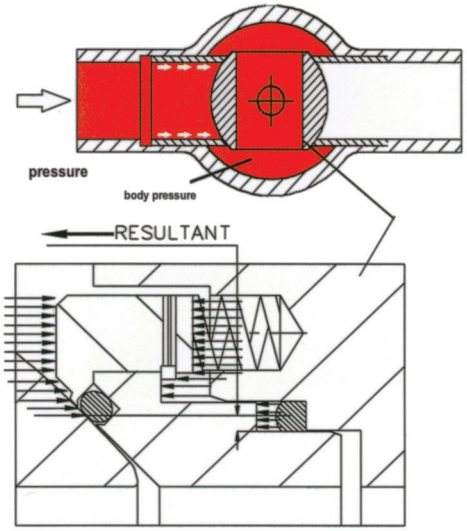

Second barrier

Self-relieving seat (Series 54 standard, 55 & 58-option)

With self-relieving seats, internal body pressure above the line pressure is automatically relieved in either the upstream or downstream line by forcing the seats away from the ball.

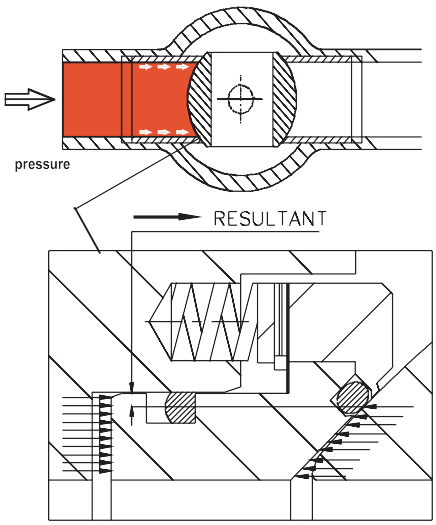

First barrier

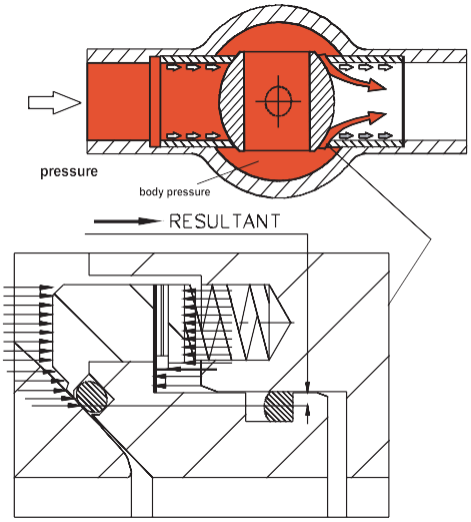

Second barrier

TYPE 54 SIDE ENTRY

STD. MATERIAL SELECTION

Pos.	Description	Material	Notes
61	STOP COLLAR	Fe 360	3
60	BEARING HOUSING	A-105	3
59	TRUNNION O-RING	VITON	
58	TRUNNION BEARING	DRY BEARING	
57	STEM PIN	42CrMo4	
53	STEM BEARING	DRY BEARING	
52	LOWER TRUNNION CAPSCREW	A-193-B7	
51	LOWER TRUNNION	A-350-LF2	1
50	LOWER TRUNNION	E.S. SEAL GRAPHITE	
45	RELIEF VALVE	A-182-F316	
47	RETAINING RING	A-350-LF2	1
39	BODY O-RING	VITON	
30	STEM GREASE FITTING	AISI 1018	
28	DRAIN PLUG	42CrMo4	
27	SEAT SPRING	18-8	
25b	SEAT RING WITH INSERT	A-350-LF2 + PTFE CCG	1-2
22	UPPER THRUST WASHER	DRY BEARING	
20	ADAPTER PLATE	Fe 410	4
19	STEM E.S. SEAL	GRAPHITE	
18	TOP COVER E.S. SEAL	GRAPHITE	
16	CLOSURE E.S. SEAL	GRAPHITE	
15	TOP COVER O-RING	VITON	
14	SEAT GASKET O-RING	VITON	
12	STEM O-RING	VITON	
10a	BEARING HOUSE CAPSCREW	A-193-B7	3
10	ADAPTER PLATE CAPSCREW	A-193-B7	4
9	TOP COVER CAPSCREW	A-193-B7	
8	BODY STUD NUT	A-194-2H	
7	BODY STUD	A-193-B7	
6	GLAND BUSHING	AISI 1018	1
5	TOP COVER	A-350-LF2	
4	STEM	42CrMo4 (AISI 4140)	1
3	BALL	A-350-LF2	1
2	CLOSURE	A-350-LF2	
1	BODY	A-350-LF2	

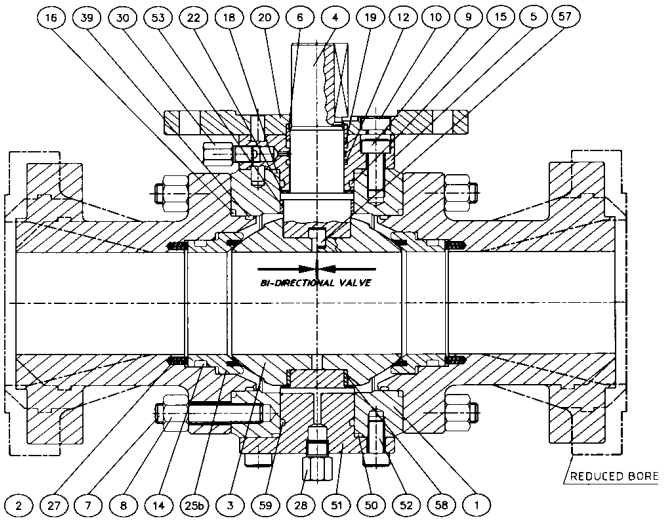

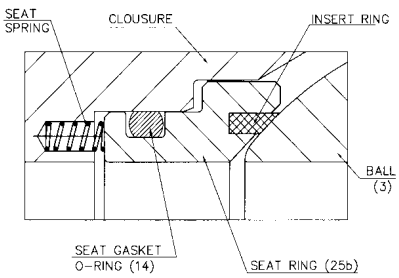

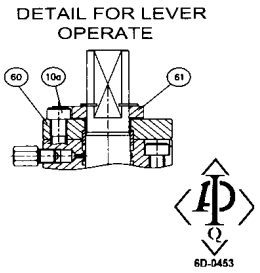

NOTES:

1) ELECTROLESS NICKEL PLATED 0.001 THICKNESS;

2) FOR LEVER-OPERATED VALVES;

3) FOR GEAR- OR ACTUATOR-OPERATED VALVES

FOR GAS OR FLUID SERVICE -CARBON STEEL+ENP TRIM – FIRE SAFE DESIGN

STANDARD TEMPERATURE RANGE: -20°F (-29°C) to 350°F (175°C) FOR CLASS 150-900 - OPTION to -50°F (-46°C)

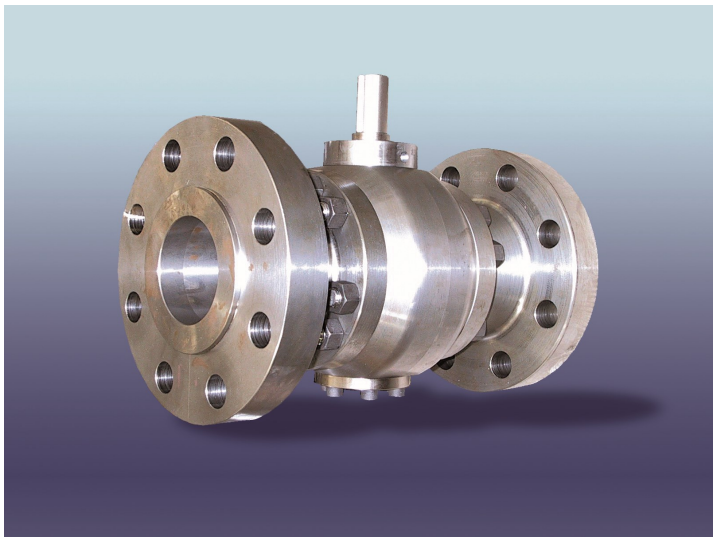

TYPE 55 SIDE ENTRY

STD. MATERIAL SELECTION

Pos.	Description	Material	Notes
98	TOP COVER SEAL	VELLUMOID	
57	STEM PIN	42CrMo4 (AISI 4140)	
48	U-CUP PACKING	VITON A 75 SH A	
46	BEARING RETAINER PIN	AISI 4140	
45	RELIEF VALVE	AISI 316	
44	CHECK VALVE	AISI 316	
41	SEAT GREASE FITTING	A 350 LF2	
40	DRAIN VALVE	A 350 LF2-AISI 4140	
36a	ANCHOR PIN	C 25 (AISI 1025)	
35	LIFTING LUG	FE 360	
34	SUPPORT LEG	FE 360	
33	BEARING	CS+PTFE	
32	BEARING RETAINER	Fe 510	
30	STEM GREASE FITTING	A 350 LF2	
27	SEAT SPRING	INCONEL X750	
26b	ELASTIC PIN	18.8	
26a	STOP SEAT RING	18.8	
26	EXTERNAL SEAT RING	A350 LF2	1
25	INTERNAL SEAT RING	A350 LF2	1
23	LOWER THRUST WASHER	CS+PTFE	
22	UPPER THRUST WASHER	CS+PTFE	
21	STEM KEY	42 CrMo 4 (AISI 4140)	
20	ADAPTOR PLATE	Fe 430 Gr.B	
19	STEM F.S. SEAL	GRAPHITE	
18	TOP COVER F.S. SEAL	GRAPHITE	
16	CLOSURE F.S. SEAL	GRAPHITE	
15	TOP COVER O-RING	VITON GLT 90 SH A	
14	SEAT GASKET O-RING	VITON GLT 90 SH A	
13	SEAL O-RING	VITON GLT 95 SH A	
12	STEM O-RING	VITON GLT 90 SH A	
11	CLOSURE O-RING	VITON GLT 90 SH A	
10	ADAPTER PLATE CAPSCREW	A193 B7M	
9	TOP COVER CAPSCREW	A193 B7M	
8	BODY STUD NUT	A194 2HM	
7	BODY STUD	A193 B7M	
6	GLAND BUSHING	FE 510	1
5	TOP COVER	A 350 LF2	
4	STEM	AISI 4140	1
3	BALL	A 350 LF2	1
2	CLOSURE	A 350 LF2	
1	BODY	A 350 LF2	
Pos.	Description	Material	Notes

NOTES:

1) ELECTROLESS NICKEL PLATED 0.001" THICKNESS

2) Part 2 as A694 F52 for 16"-42" WE's

FOR GAS OR FLUID SERVICE -CARBON STEEL+ENP TRIM -

FIRE SAFE DESIGN

STANDARD TEMPERATURE RANGE: -20°F (-29°C) to 350°F (175°C)

FOR CLASS 150-1500 - OPTION to -50°F (-46°C)

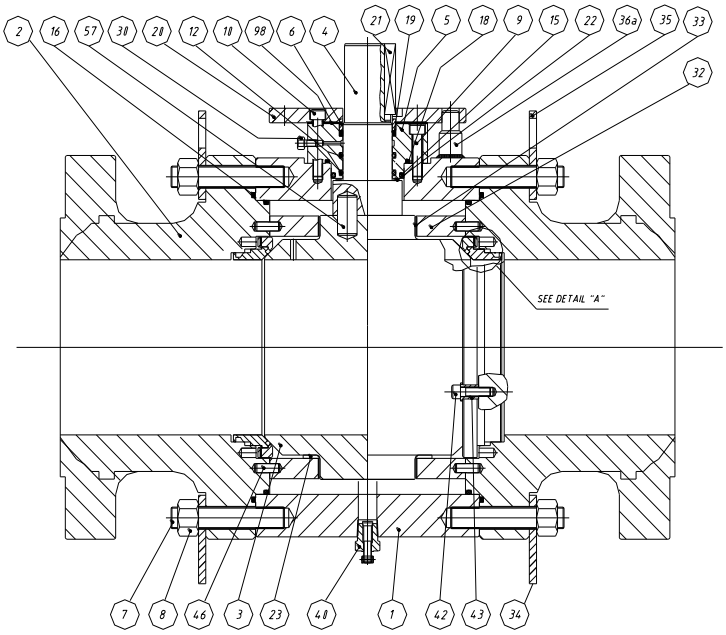

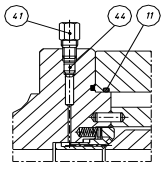

LUBRICATED SEAT DETAIL

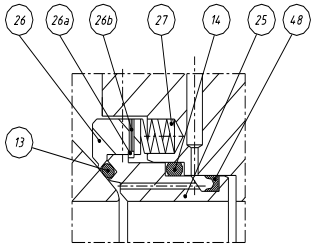

DETAIL "A"

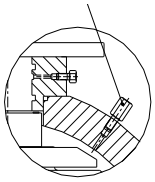

SIDE VIEW DETAIL

STD. MATERIAL SELECTION

Type 58 ALL WELDED BODY

#	Description	Material	Notes
45	RELIEF VALVE	AISI 316	
48	U-CUP PACKING	VITON A 75 SH A	
44	CHECK VALVE	AISI 316	
41	SEAT GREASE FITTING	A 350 LF2	
36	ANCHOR PIN	c75	
33	BEARING	C.S.+PTFE	
32	BEARING RETAINER	Fe 510	
31	ANTISTATIC DEVICE	18-8	
30	STEM GREASE FITTING	A 350 LF2	
28	DRAIN VALVE	A 350 LF2 -AISI 4140	
27	SEAT SPRING	INCONEL X750	
26	EXTERNAL SEAT	A350 LF2	1
25	INTERNAL SEAT	A350 LF2	1
23	LOWER THRUST WASHER	C.S.+PTFE	
22	UPPER THRUST WASHER	C.S.+PTFE	
21	STEM KEY	42 CrMo 4 (AISI 4140)	
20	ADAPTOR PLATE	Fe 430 Gr.B	
19	STEM F.S. SEAL	GRAPHITE	
18	TOP COVER F.S. SEAL	GRAPHITE	
15	TOP COVER O-RING	VITON GLT 90SHA	
14	SEAT GASKET O-RING	VITON GLT 90SHA	
13	SEAL O-RING	VITON GLT 95SHA	
12	STEM O-RING	VITON GLT 90SHA	
10	ADAPTER PLATE CAPSCREW	A193 B7M	
9	TOP COVER CAPSCREW	A193 B7M	
6	GLAND BUSHING	Fe 510	1
5	TOP COVER	A350 LF2	
4	STEM	AISI 4140	1
3	BALL	A350 LF2	1
2	CLOSURE	A350 LF2/A694 F52	
1	BODY	A350 LF2	

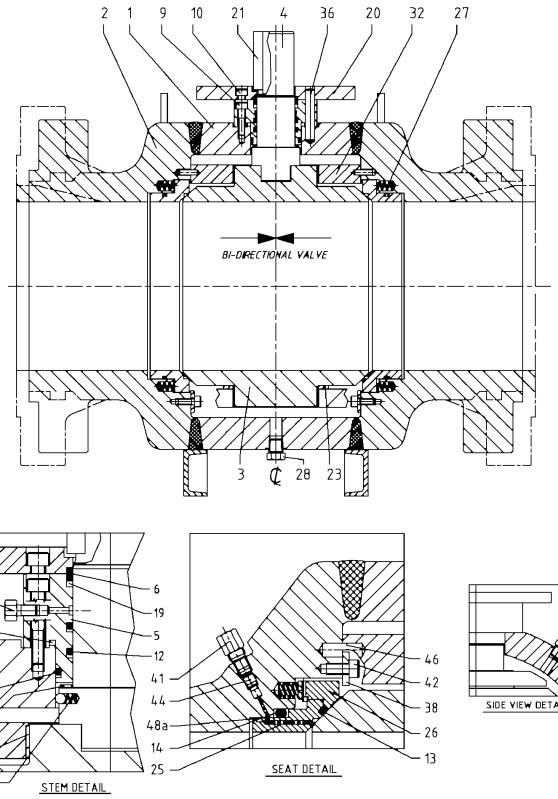

STANDARD MATERIALS

Materials for general service (complies to NACE MR0175) CARBON STEEL + ENP	
ANSI Class	600
Temperature	-20°F + 350°F
Body	ASTM A350 Gr. LF2
Ball	ASTM A350 Gr. LF2 + ENP
Seat	ASTM A350 Gr. LF2 + ENP
Stem	AISI 4140 + ENP
Seat gasket	VITON AED
Other seals	VITON
Seat spring	INCONEL X 750

Alternative material selections available upon request.

BALL VALVES TYPE 54 (Overall Dimensions)

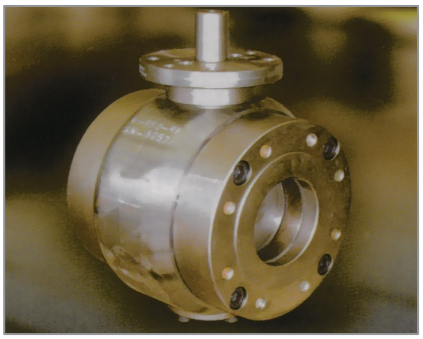

ANSI CLASS 150 (PN 20)

Working Pressure 285 Psi (19.6 bar) - Hydrostatic Shell Test 450 Psi (30 bar)

SIZE inches	Thru Bore (DN)	FACE TO FACE			G	H	S	X	BARE STEM VALVE WEIGHT LBS.	
		WE	RF	RTJ				LEVER	WE	RF/RTJ
2"	2"	8 1/2"	7"	7 1/2"	4 1/8"	4 3/4"	5 3/4"	12 5/8"	33	44
3"	3"	11 1/8"	8"	8 1/2"	5 1/8"	5 3/4"	7 7/8"	16 9/16"	77	88
4"	4"	12"	9"	9 1/2"	6 1/8"	6 11/16"	7 7/8"	20 1/2"	115	139

NOTE: CLASS 150 full bore valves are supplied with compact design.

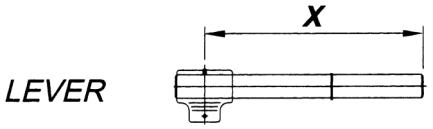

ANSI CLASS 300 (PN 50)

Working Pressure 740 Psi (51.1 bar) - Hydrostatic Shell Test 1125 Psi (77 bar)

SIZE inches	Thru Bore (DN)	FACE TO FACE			G	H	S	X	BARE STEM VALVE WEIGHT LBS.	
		WE	RF	RTJ				LEVER	WE	RF/RTJ
2"	2"	8 1/2"	8 1/2"	9 1/8"	4 1/8"	4 3/4"	5 3/4"	14 9/16"	33	47
3"	3"	11 1/8"	11 1/8"	11 3/4"	5 1/8"	5 3/4"	7 7/8"	22 1/2"	84	113
4"	4"	12"	12"	12 5/8"	6 1/8"	6 11/16"	9 1/2"	26"	124	166

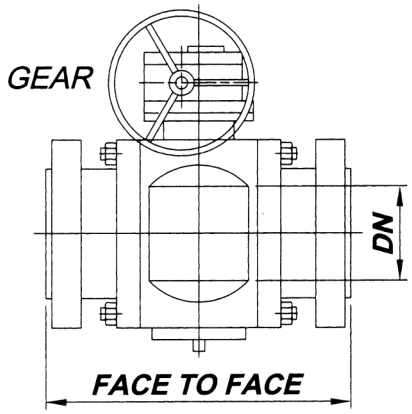

ANSI CLASS 600 (PN 100)

Working Pressure 1480 Psi (102.1 bar) - Hydrostatic Shell Test 2225 Psi (154 bar)

SIZE inches	Thru Bore (DN)	FACE TO FACE			G	H	S	X	BARE STEM VALVE WEIGHT LBS.	
		WE	RF	RTJ				LEVER	WE	RF/RTJ
2"	2"	11 1/2"	11 1/2"	11 5/8"	4 1/8"	4 3/4"	5 3/4"	16 15/16"	40	58
3"	3"	14"	14"	14 1/8"	5 1/8"	5 3/4"	7 7/8"	26 3/8"	93	126
4"	4"	17"	17"	17 1/8"	6 1/8"	6 11/16"	9 1/2"	29 15/16"	159	223

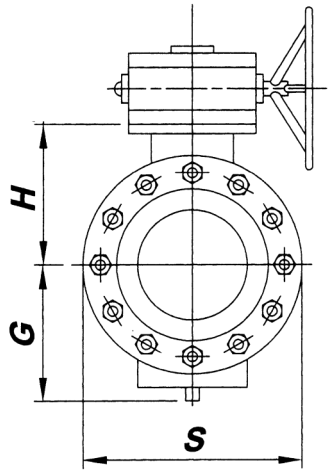

ANSI CLASS 900 (PN 150)

Working Pressure 2220 Psi (153.2 bar) - Hydrostatic Shell Test 3350 Psi (230 bar)

SIZE inches	Thru Bore (DN)	FACE TO FACE			G	H	S	X	BARE STEM VALVE WEIGHT LBS.	
		WE	RF	RTJ				LEVER	WE	RF/RTJ
2"	2"	14 1/2"	14 1/2"	14 5/8"	4 17/32"	4 15/16"	6 5/16"	23 5/8"	75	128
3"	3"	15"	15"	15 1/8"	5 3/4"	6 1/8"	8 1/4"	35 1/2"	153	184
4"	4"	18"	18"	18 1/8"	6 7/8"	7 11/16"	10 1/4"	-	320	358

ANSI CLASS 1500 (PN 250)

Working Pressure 3600 Psi (248 bar) - Hydrostatic Shell Test 5400 Psi (372 bar)

SIZE inches	Thru Bore (DN)	FACE TO FACE			G	H	S	X	BARE STEM VALVE WEIGHT LBS.	
		WE	RF	RTJ				LEVER	WE	RF/RTJ
2"	2"	14 1/2"	14 1/2"	14 5/8"	4 17/32"	4 15/16"	6 5/16"	23 5/8"	75	128
3"	3"	18 1/2"	18 1/2"	18 5/8"	5 3/4"	6 1/8"	8 1/4"	35 1/2"	153	214
4"	4"	21 1/2"	21 1/2"	21 5/8"	6 7/8"	7 11/16"	10 1/4"	-	322	366

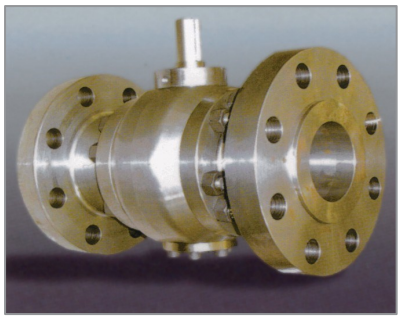

BALL VALVES TYPE 55 (Dimensions) Side Entry Design

ANSI CLASS 150 (PN 20)

Working Pressure 285 PSI (19.6 bar) - Hydrostatic Shell Test 450 PSI (30 bar)

inches	Thru Bore (DN)	WE	RF	RTJ	G	H	S	Weight lbs. WE	Weight lbs. RF/RTJ
6"	6"	18"	15 1/2"	16"	12"	8 1/2"	12"	364	386
8"	8"	20 1/2"	18"	18 1/2"	13 3/8"	10 1/16"	15 3/4"	629	684
10"	10"	22"	21"	21 1/2"	15"	11 5/8"	18 5/16"	805	871
12"	12"	25"	24"	24 1/2"	16 9/16"	13 9/16"	21 11/16"	1,312	1,401
14"	13 1/4"	30"	27"	27 1/2"	18 1/2"	14 3/4"	23 1/16"	1,535	1,645
16"	15 1/4"	33"	30"	30 1/2"	20 1/16"	16 3/8"	26 9/16"	1,976	2,086
20"	19 1/4"	39"	36"	36 1/2"	23 1/4"	19 1/2"	32 7/8"	3,864	4,040
24"	23 1/4"	45"	42"	42 1/2"	26 3/8"	22 5/8"	39"	6,655	7,934
30"	29"	55"	51"	♣	31 3/4"	27 9/16"	48 5/8"	11,616	11,859
36"	34 1/2"	68"	60"	♣	35 7/8"	32 1/2"	56 15/16"	18,081	18,522

ANSI CLASS 300 (PN 50)

Working Pressure 720 PSI (50 bar) - Hydrostatic Shell Test 1080 PSI (75 bar)

inches	Thru Bore (DN)	WE	RF	RTJ	G	H	S	Weight lbs. WE	Weight lbs. RF/RTJ
6"	6"	18"	15 7/8"	16 1/2""	12"	8 1/2"	12"	408	430
8"	8"	20 1/2"	19 3/4"	20 3/8"	13 3/8"	10 1/16"	16"	717	739
10"	10"	22"	22 3/8"	23"	15"	11 5/8"	18 1/2"	1048	1092
12"	12"	25"	25 1/2"	26 1/8"	16 9/16"	13 9/16"	21 7/8"	1337	1425
14"	13 1/4"	30"	30"	30 5/8"	18 1/2"	14 3/4"	23 7/16"	1791	1989
16"	15 1/4"	33"	33"	33 5/8"	20 1/16"	16 3/8"	26 3/4"	2067	2585
18"	17 1/4"	36"	36"	36 5/8"	21 1/2"	18 1/8"	30 3/8"	3154	3573
20"	19 1/4"	39"	39"	39 5/8"	23 1/4"	18 5/8"	33 1/4"	4318	4869
24"	23 1/4"	45"	45"	45 3/4"	26 3/8"	22 5/8"	39 7/16"	6743	7736
26"	25"	49"	49"	50"	28 3/8"	24 5/8"	45 3/16"	8931	9813
30"	29"	55"	55"	56"	31 3/4"	27 9/16"	49 1/4"	12569	13341
36"	34 1/2"	68"	68"	68 1/4"	35 7/8"	32 1/2"	57 1/2"	16648	17662

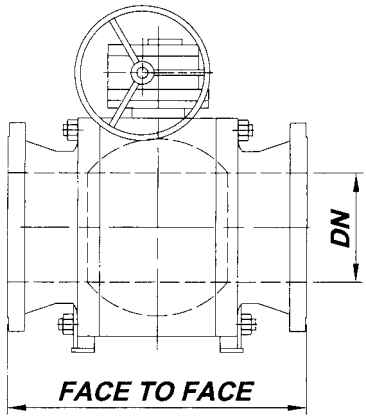

ANSI CLASS 600 (PN 100)

Working Pressure 1440 PSI (99 bar) - Hydrostatic Shell Test 2160 PSI (149 bar)

inches	Thru Bore (DN)	WE	RF	RTJ	G	H	S	Weight lbs. WE	Weight lbs. RF/RTJ
6"	6"	22"	22"	22 1/8""	12 1/4"	8 1/2"	14"	419	541
8"	8"	26"	26"	26 1/8"	13 3/4"	10"	16 9/16"	849	1004
10"	10"	31"	31"	31 1/8"	15 3/8"	11 5/8"	20"	951	1259
12"	12"	33"	33"	33 1/8"	16 15/16"	13 9/16"	22 1/4"	1586	1912
14"	13 1/4"	35"	35"	35 1/8"	18 15/16"	14 3/4"	23 13/16"	2033	2408
16"	15 1/4"	39"	39"	39 1/8"	20 11/16"	16 3/8"	27 3/8"	2602	3198
18"	17 1/4"	43"	43"	43 1/8"	22 1/4"	18 1/8"	30 15/16"	3789	5619
20"	19 1/4"	47"	47"	47 1/4"	23 13/16"	19 1/2"	33 7/8"	5442	5839
22"	21 1/4"	51"	51"	51 3/8"	25 5/8"	21 1/4"	37 7/16"	6086	6770
24"	23 1/4"	55"	55"	55 3/8"	27 3/16"	22 5/8"	40 3/16"	8049	8820
26"	25"	57"	57"	57 1/2"	29 1/8"	24 5/8"	43 1/8"	9239	11224
30"	29"	65"	65"	65 1/2"	32 3/4"	27 1/2"	50 1/4"	12657	15413
34"	32 3/4"	76"	76"	76 5/8"	35 1/2"	30 15/16"	55 1/8"	22050	26019
36"	34 1/2"	82"	82"	82 5/8"	37"	32 1/2"	58 3/4"	21550	24100

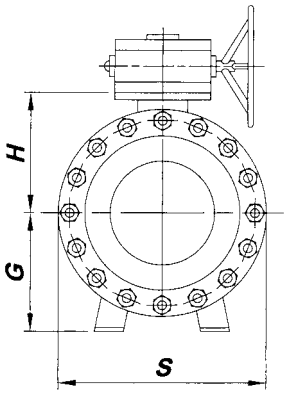

ANSI CLASS 900 (PN 150)

Working Pressure 2220 PSI (149 bar) - Hydrostatic Shell Test 3350 PSI (231 bar)

inches	Thru Bore (DN)	WE	RF	RTJ	G	H	S	Weight lbs. WE	Weight lbs. RF/RTJ
6"	6"	24"	24"	24 1/8""	9 7/8"	9 5/8"	15"	519	717
8"	8"	29"	29"	29 1/8"	11 7/16"	10 13/16"	18 1/2"	774	1054
10"	10"	33"	33"	33 1/8"	13 9/16"	12 5/8"	21 1/2"	1637	1967
12"	12"	38"	38"	38 1/8"	15 3/8"	14 3/8"	24"	2188	2519
14"	13 1/4"	40 1/2"	40 1/2"	40 7/8"	17 3/4"	15 3/8"	26 3/4"	2523	3284
16"	15 1/4"	44 1/2"	44 1/2"	44 7/8"	19 3/4"	16 15/16"	30 5/16"	3171	4097
20"	19 1/4"	52"	52"	52 1/2"	23 7/16"	20 7/8"	36 1/4"	5370	6968
24"	23 1/4"	61"	61"	61 3/4"	27 9/16"	24 7/16"	43 3/4"	8258	11224

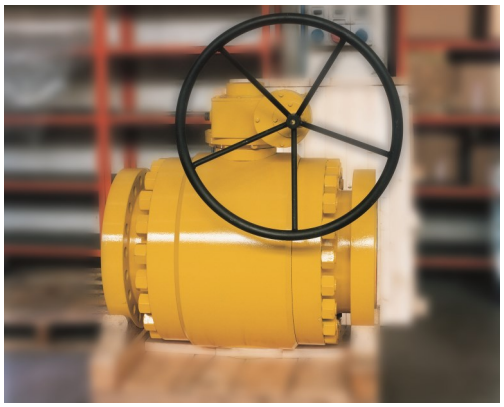

Different sizes and configurations available on request

♣ To be confirmed after order placement

BALL VALVES TYPE 55 (Overall Dimensions)
Side Entry Design

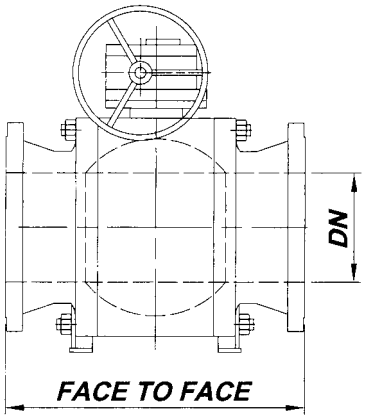

ANSI CLASS 1500 (PN 250)

Working Pressure 3600 Psi (248 bar) - Hydrostatic Shell Test 5400 Psi (372 bar)

SIZE inches	Thru Bore (DN)	WE	RF	RTJ	G	H	S	Weight lbs. WE	Weight lbs. RF/RTJ
6"	6"	27 3/4"	27 3/4"	28""	12 5/8"	11 1/16"	16 15/16"	829	1028
8"	8"	32 3/4"	32 3/4"	33 1/8"	14 3/4"	13"	21 1/4"	964	1482
10"	10"	39"	39"	39 3/8"	17 1/2"	15 9/16"	25 13/16"	1626	2408
12"	12"	44 1/2"	44 1/2"	45 1/8"	19 3/4"	16 3/4"	30 5/16"	2402	3385
16"	14 3/4"	54 1/2"	54 1/2"	55 3/8"	25 1/4"	22 1/16"	39"	7846	9919
18"	16 3/4"	60 1/2"	60 1/2"	61 7/16"	27 3/4"	23 1/4"	42 15/16"	10584	13230
20"	18 5/8"	65 1/2"	65 1/2"	66 7/16"	29 15/16"	28 9/16"	46 1/2"	15987	18743
22"	20 5/8"	♣	♣	♣	33 1/16"	30 3/8"	52"	♣	♣
24"	22 1/2"	76 1/2"	76 1/2"	77 5/8"	35 1/4"	32 1/8"	56 1/8"	♣	♣

Different sizes and configurations available on request
♣ To be confirmed after order placement

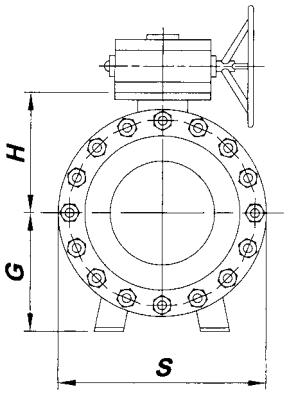

BALL VALVES TYPE 58 (Overall Dimensions)
ALL WELDED DESIGN

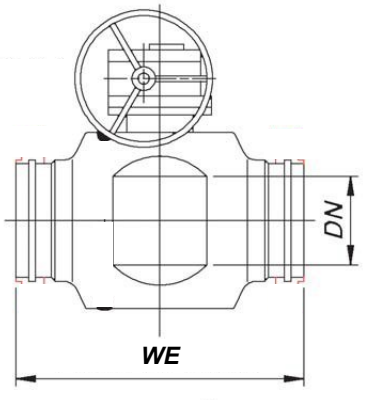

ANSI CLASS 600 (PN 100)

SIZE inches	Thru Bore (DN)	WE	RF	G	H	S	Weight lbs. WE	Weight lbs. RF
20"	19.30"	47"	47"	23.85"	19.50"	33.90"	4080	4895
24"	23.30"	55"	55"	27.25"	22.62"	40.25"	7038	8360
30"	29"	65"	65"	32.75"	27.62"	50.25"	12142	14280
36"	34.50"	82"	82"	37"	32.50"	58.62"	19380	22200
42"	40.25"	66.50"	80"	41"	39.85"	69.50"	31862	35126

Different sizes and configurations available on request

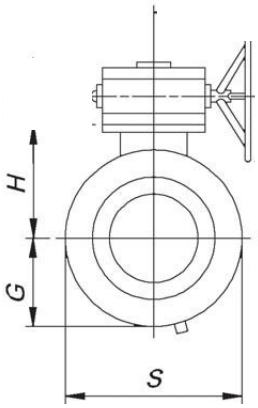

Valve Accessories

Custom Stem extensions for Ball Valves and Lubricated Plug Valves

Permits usage in below grade or customer specified applications

Custom or standard length stem extensions include piping and fittings to raise the body drain, body vent and emergency sealant injection fittings above ground level

Custom and standard coatings available

Customer supplied or QTR supplied pipe-pups welded by certified welders

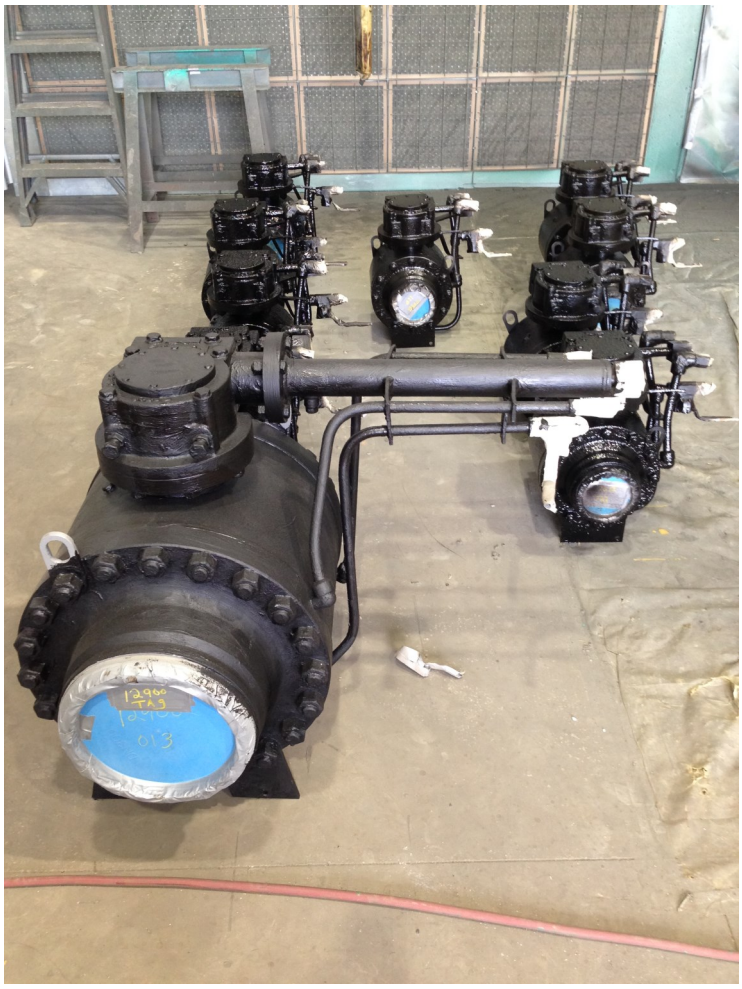

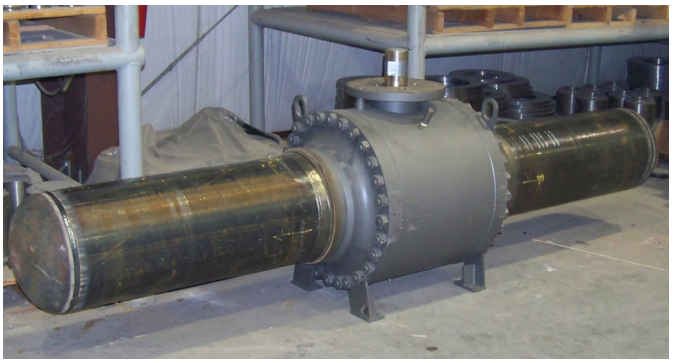

Valve Automation

IN-HOUSE OR FIELD INSTALLATION AND TESTING

Pneumatic, Gas over Oil and Electric Actuation Packages

Custom mounting plates and enclosures to meet customer needs and requirements

Single source responsibility for complete automation package

Custom controls to meet customer specifications

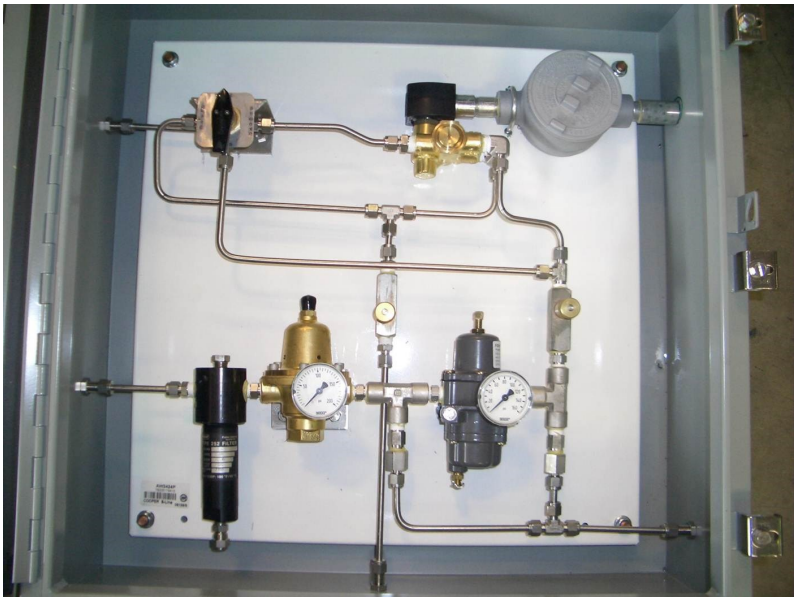

ADDITIONAL PRODUCTS

QTR also sells and stocks other valve types which include:

Delta Lubricated Plug Valves

Vitas Full Open Swing Check Valves

Vitas Expanding Gate Valves

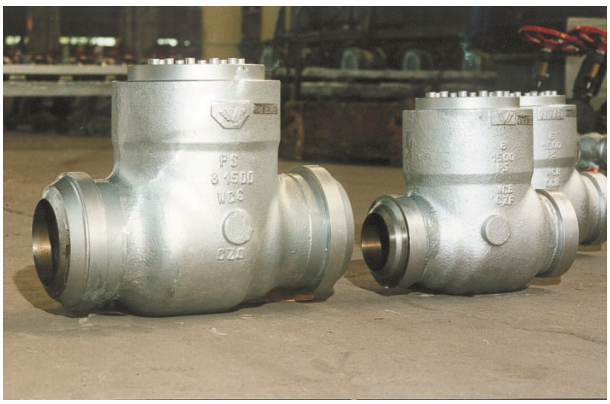

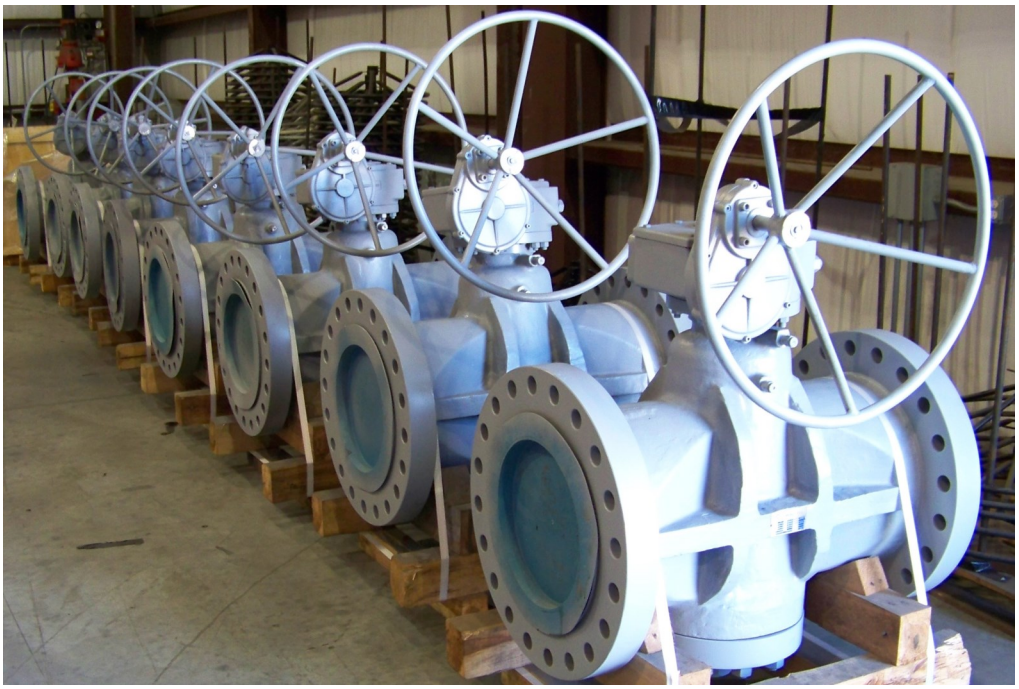

Quarter Turn Resources Inc.
P.O. Box 1455
Ponca City, OK 74602

Phone: 580-765-0183
Toll Free: 866-765-0183
Fax: 580-765-0182
E-mail: sales@qtrinc.biz
Website: www.qtrinc.biz

Representative: